LG160962-DW

160 x 96 dots + white led backlight, I²C, 3.3V

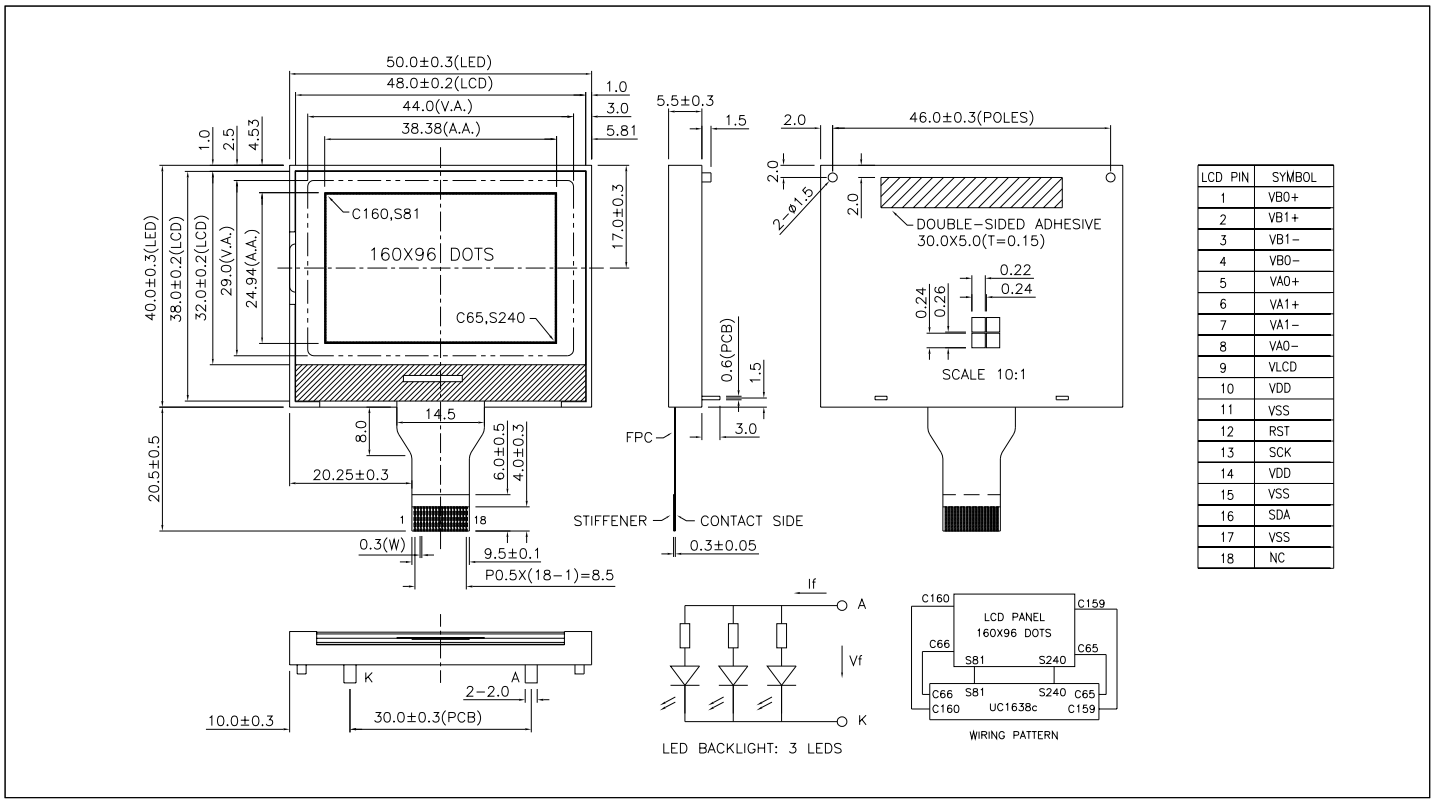

LCD PIN	SYMBOL
1	VB0+
2	VB1+
3	VB1−
4	VB0−
5	VA0+
6	VA1+
7	VA1−
8	VA0−
9	VLCD
10	VDD
11	VSS
12	RST
13	SCK
14	VDD
15	VSS
16	SDA
17	VSS
18	NC

ABSOLUTE MAXIMUM RATINGS

Item	Symbol	Min.	Max.	Unit
Supply Voltage(Logic)	V_{DD} - V_{SS}	-0.3	4.0	V
Supply Voltage(LCD)	V_{LCD} - V_{SS}	-0.3	19.8	V
Input Voltage	V_I	-0.4	V_{DD}+ 0.5	V
Operating Temp.	T_{opr}	-20	70	°C
Storage Temp.	T_{stg}	-30	80	°C

MECHANICAL DATA

Item	Nominal Dimensions	Unit
Module Size (W x H x T)	50.0 x 40.0 x 8.5	mm
Viewing Area (W x H)	44.0 x 29.0	mm
Dot Pitch (W x H)	0.24 x 0.26	mm
Dot Size (W x H)	0.22 x 0.24	mm
Weight	Approx. 15	g

ELECTRICAL CHARACTERISTICS (V_{DD}=3.3V±0.3V)

Item	Symbol	Test Condition	Min.	Typ.	Max.	Unit
Input High Voltage	V_{IH}	--	0.8V_{DD}	--	V_{DD}	V
Input Low Voltage	V_{IL}	--	0	--	0.2V_{DD}	V
Output High Voltage	V_{OH}	--	0.8V_{DD}	--	V_{DD}	V
Output Low Voltage	V_{OL}	--	0	--	0.2V_{DD}	V
Supply Current	I_{DD}	V_{DD} = 3.3V	--	0.6	1.0	mA
LCD Driving Voltage	V_{LCD}-V_{SS}	Ta=25°C	--	13.0	--	V

PIN CONNECTIONS

Pin	Symbol	Level	Function
1	VB0+	--	LCD bias voltage
2	VB1+	--	LCD bias voltage
3	VB1-	--	LCD bias voltage
4	VB0-	--	LCD bias voltage
5	VA0+	--	LCD bias voltage
6	VA1+	--	LCD bias voltage
7	VA1-	--	LCD bias voltage
8	VA0-	--	LCD bias voltage
9	V_{LCD}	--	LCD driving voltage
10	V_{DD}	3 to 3.6V	Power supply for logic and booster
11	V_{SS}	0V	GND
12	RST	L	Reset signal. Active "L".
13	SCK	H/L	I2C serial clock
14	V_{DD}	3 to 3.6V	Power supply for logic
15	V_{SS}	0V	GND
16	SDA	H/L	I2C Serial data input/output
17	V_{SS}	0V	GND
18	NC	--	No connection

BLOCK DIAGRAM

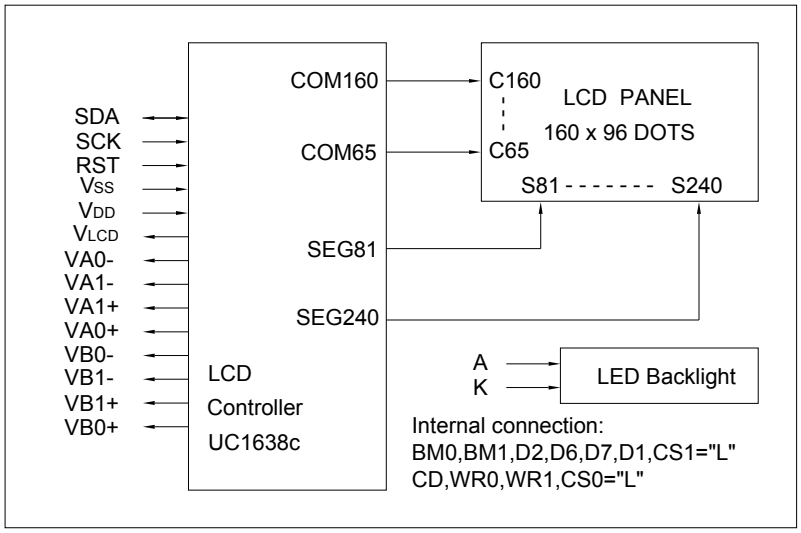

LED BACKLIGHT SPECIFICATIONS (Ta=25°C)

Item	Symbol	Typ.	Max.	Unit
Forward Voltage	V_f	2.9	3.1	V
Forward Current	I_f	20	--	mA
LED Color	White			